GMC 2017 YUKON

YUKON XL SLT IN QUICKSILVER METALLIC (left)
YUKON DENALI IN IRIDIUM METALLIC (right)
Vehicles shown with available equipment.

PRECISION MATTERS

It matters in every pound-foot of torque, every millimetre of fit and finish and every decibel of quiet. That's what drives us to reimagine solutions and create rewarding driving experiences. A premium example is the 2017 Yukon. Its EcoTec3 engines offer proven V8 power and efficiency, while its suspension is engineered for uncompromising ride and handling. Inside, a quiet cabin welcomes you with premium materials and ingenious technologies.

YUKON DENALI INTERIOR IN JET BLACK
shown with available equipment.

YUKON XL DENALI IN WHITE FROST TRICOAT
shown with available equipment.

DENALI

MAKES A STATEMENT.
ADDS AN EXCLAMATION POINT.

The ultimate expression of Professional Grade arrives in the form of Yukon Denali. Signature Denali styling begins with its three-dimensional grille, projector-beam HID headlamps and chrome accents and continues with available 22" wheels and optional power-retractable assist steps with perimeter lighting.

+ DISTINCTIVE DENALI GRILLE

+ POWER-RETRACTABLE ASSIST STEPS WITH PERIMETER LIGHTING (AVAILABLE)

+ PROJECTOR-BEAM HIGH-INTENSITY DISCHARGE (HID) HEADLAMPS

+ FRONT AND REAR GMC LED SIGNATURE LIGHTING

SLT

STANDS OUT. EXCEPT TO THE WIND.

Yukon SLT was designed for efficient aerodynamics. The goal was to make it feel smaller to the wind for reduced noise and improved efficiency. Bold, sculpted lines glide from the three-dimensional grille and over the inlaid doors for smooth, uninterrupted airflow.

+ INLAID DOORS REDUCE WIND NOISE

+ LIFTGATE SPOILER CONCEALS WIPER TO REDUCE DRAG FOR IMPROVED EFFICIENCY

+ LAMINATED WINDSHIELD AND FRONT DOOR GLASS ENHANCES QUIETNESS

+ NEW ACTIVE AERO GRILLE SHUTTERS IMPROVE AERODYNAMICS

+ THE NEW SLT PREMIUM EDITION INCLUDES ALL OF THE ABOVE AND MORE:

- **22" 6-SPOKE SPLIT CHROME WHEELS**
- **BRIGHT BODYSIDE MOULDING**
- **UNIQUE GRILLE INSERT**
- **POLISHED EXHAUST TIP**

YUKON SLT INTERIOR IN JET BLACK
shown with available equipment.

YUKON SLT PREMIUM EDITION IN CRIMSON RED TINTCOAT (left)
YUKON XL SLT IN QUICKSILVER METALLIC (right)
shown with available equipment.

DENALI
Technique.

WI-FI? WHY, OF COURSE.

Yukon offers OnStar 4G LTE with Wi-Fi® hotspot[1] to keep you connected, informed and entertained—on the go. There's also the Colour Touch Audio System with IntelliLink,[2] featuring a 203 mm diagonal display and seamless hands-free integration of digital devices. Yukon Denali adds a Customizable Driver Display so you can choose the information you see and how you see it. Denali also offers a Bose® Centerpoint® Surround Sound system and, to help keep your eyes focused on the road, a four-colour Head-Up Display.

+ DENALI INCLUDES A 203 MM DIAGONAL CUSTOMIZABLE DRIVER DISPLAY

+ WIRELESS CHARGING MAT[3] KEEPS YOU POWERED UP (AVAILABLE)

+ BLUETOOTH®[4] HANDS-FREE AUDIO STREAMING

+ NEW TEEN DRIVER FEATURE HELPS SUPPORT SAFE DRIVING HABITS

[1]Visit onstar.ca for coverage maps, details and system limitations. Available 4G LTE Wi-Fi requires compatible mobile device, active OnStar service and data plan. Data plans provided by AT&T.® Services vary by model, conditions and geographical and technical restrictions. OnStar with 4G LTE connectivity is available on select vehicle models and in select markets. [2]Full functionality requires compatible Bluetooth and smartphone, and USB connectivity for some devices. Visit intellilink.gmc.gm.ca for more details. [3]The vehicle must be on or Retained Accessory Power must be active. Remove all objects from the charging pad. Place the compatible mobile device face up on the charging symbol on the charging pad. Move the device slowly until the battery charging symbol displays on the touch-screen, indicating the device is charging. See your Infotainment System Owner's Manual. [4]Not compatible with all devices.

YUKON XL SLT INTERIOR IN COCOA/DUNE
shown with available equipment.

YOU ONLY HAVE TWO HANDS.

To help you load it up while your hands are full, Yukon Denali and SLT include a hands-free, foot-activated power liftgate. Once the liftgate is open, Yukon makes it easy to lower the second and third rows to create a flat cargo floor. And since we all travel with plenty of things we just can't leave behind, you'll find generous storage compartments, including an expansive centre console as well as power outlets, integrated throughout Yukon.

+ THREE-PRONG 110-VOLT OUTLETS PROVIDE A CONVENIENT CHARGE

+ UNDER-FLOOR CARGO MANAGEMENT SYSTEM AND CARGO NET KEEP GEAR ORGANIZED AND SECURE

+ HIDDEN STORAGE BEHIND THE CENTRE-MOUNTED DISPLAY; INCLUDES USB[1] OUTLET

[1]Not compatible with all devices.

TECHNOLOGY AT YOUR FINGERTIPS, YOUR EYES, YOUR EARS AND ESPECIALLY YOUR VOICE.

The idea behind the design and engineering of Yukon is to help you focus solely on the road. That means offering technologies that allow you to keep your eyes on the road while keeping you connected, informed and entertained at the same time.

CUSTOMIZABLE DRIVER DISPLAY Yukon Denali features a reconfigurable gauge cluster with three selectable themes—Standard, Technology and Media. Personalize the 203 mm diagonal Customizable Driver Display for optimized information placement.

NAVIGATION[1] In response to your voice or touch, Yukon's available Navigation System displays 2-D or 3-D map graphics on the 203 mm diagonal centre-mounted screen. NavTraffic[2] (3 trial months of SiriusXM) incorporates real-time traffic and road conditions, directing you toward the most efficient route.

INTELLILINK[3] GMC IntelliLink features a full-colour, 203 mm diagonal screen for easy viewing and hands-free, voice-activated control of your smartphone. Stream music, sync MP3 music, receive vocalized text messages, benefit from Siri® Eyes Free assistance, connect libraries from multiple devices and store phone contacts.

BOSE CENTERPOINT SURROUND SOUND For the sensation of a live performance, Denali includes a 10-speaker surround sound system with SurroundStage® signal processing. SLT and SLE feature nine premium speakers and a centre-mounted subwoofer for rich bass tones and an enhanced listening experience.

FOUR-COLOUR HEAD-UP DISPLAY (HUD)
This available option projects essential driving information at eye level so your eyes stay on the road.

REAR-SEAT ENTERTAINMENT SYSTEM
This available system includes Blu-ray™/DVD player, 234 mm diagonal display, digital headphones, HDMI-hardwired connector as well as the ability to project devices wirelessly. Yukon XL SLT and XL Denali models feature two screens, one specifically for third-row passengers.

WIRELESS CHARGING MAT[4] With available wireless charging conveniently located on the centre console, you can power up your compatible phone or device anytime the vehicle is running.

[1]At time of printing, detailed map coverage is available for most major urban areas of the United States and for certain metropolitan areas of Canada (Vancouver, Calgary, Edmonton, Winnipeg, Windsor, London, Toronto, Ottawa, Montreal, Quebec City and Halifax). Coverage is significantly limited outside these areas. [2]Available in 10 Canadian provinces, three territories and the 48 contiguous United States. Subscription sold separately after trial period. If you decide to continue your service at the end of your trial subscription, the plan you choose will automatically renew and bill at then-current rates until you call 1-877-209-0079 to cancel. Other fees and taxes will apply. All fees and programming subject to change. See SiriusXM "Terms & Conditions" and complete details at siriusxm.ca. [3]Full functionality requires compatible Bluetooth and smartphone, and USB connectivity for some devices. Visit intellilink.gmc.gm.ca for more details. [4]The vehicle must be on or Retained Accessory Power must be active. Remove all objects from the charging pad. Place the compatible mobile device face up on the charging symbol on the charging pad. Move the device slowly until the battery charging symbol displays on the touch-screen, indicating the device is charging. See your Infotainment System Owner's Manual.

YUKON DENALI IN MINERAL METALLIC
shown with available equipment.

HANDLES THE STRAIGHT AND NARROW. AND THE TWISTS AND TURNS.

Behind the wheel of Yukon, you'll feel confident and in command of the renowned EcoTec3 engine technologies while you and your passengers enjoy a comfortable ride. Yukon Denali goes a step further by adding Magnetic Ride Control (illustrated below), a suspension that speed-reads the road up to 1000 times a second, thinks and responds to road changes before you ever could.

CRUISING
On smooth roads, the iron particles in the patented magnetorheological fluid align to allow for a smooth ride.

CONTROLLED
During cornering or on uneven surfaces, a magnetic field realigns the particles for a more secure, precise driving experience.

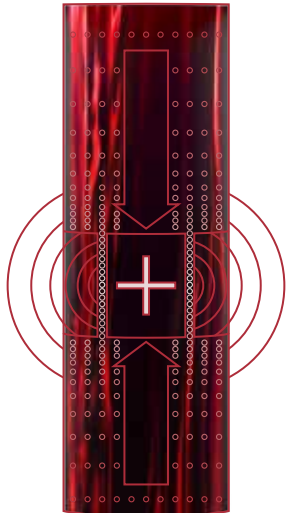

PERFORMS FROM A POSITION OF STRENGTH.

From Yukon's fully boxed frame to its EcoTec3 engine family, it is engineered to put you in a constant position of strength, power and efficiency.

ECOTEC3 ENGINES They use Direct Injection (DI), Active Fuel Management and continuously Variable Valve Timing (VVT) to deliver exceptional power, efficiency and durability. The 5.3L V8 scores the best fuel efficiency in a large SUV.[1] For more performance, Yukon Denali's 6.2L V8 produces a class-leading[1] 420 hp and 460 lb.-ft. of torque.

ACTIVE AERO GRILLE SHUTTERS Grille shutters automatically close to maximize aerodynamic efficiency when conditions are right. The shutters are designed to remain open in situations where maximum airflow is needed.

TRANSMISSIONS The 5.3L V8 features a Hydra-Matic 6-speed and the 6.2L V8 is paired with an 8-speed automatic transmission. They both offer the control of a manual and the ease of an automatic with Driver Shift Control.

MAGNETIC RIDE CONTROL On Yukon Denali, it senses changes in the road up to 1000 times a second, instantly adjusting each shock absorber for maximum comfort, control and agility.

CORROSION-RESISTANT DURALIFE BRAKE ROTORS GMC engineers used patented Ferritic Nitro-Carburizing (FNC) technology that can help double rotor life.

FOUR-WHEEL DRIVE Yukon's available four-wheel-drive system allows you to switch between two-wheel drive for optimum fuel efficiency and four-wheel drive for additional traction and control.

FOUR-WHEEL DISC BRAKES The stopping system improves pedal feel for a stronger, more confident braking performance.

FULLY BOXED FRAME Yukon's frame is constructed with 75 percent high-strength steel for maximum people- and cargo-carrying capability.

ELECTRIC VARIABLE-ASSIST POWER STEERING The electric variable-assist power rack-and-pinion steering system improves fuel efficiency versus engine-powered systems.

SHEAR-STYLE BODY MOUNTS Connecting the body to the frame are high lateral-rate and hydraulic body mounts. They provide additional comfort and a smoother, quieter ride.

[1]Comparison based on wardsauto.com 2016 Large Sport/Utility Vehicle segment and latest competitive information available at time of printing. Excludes other GM vehicles.

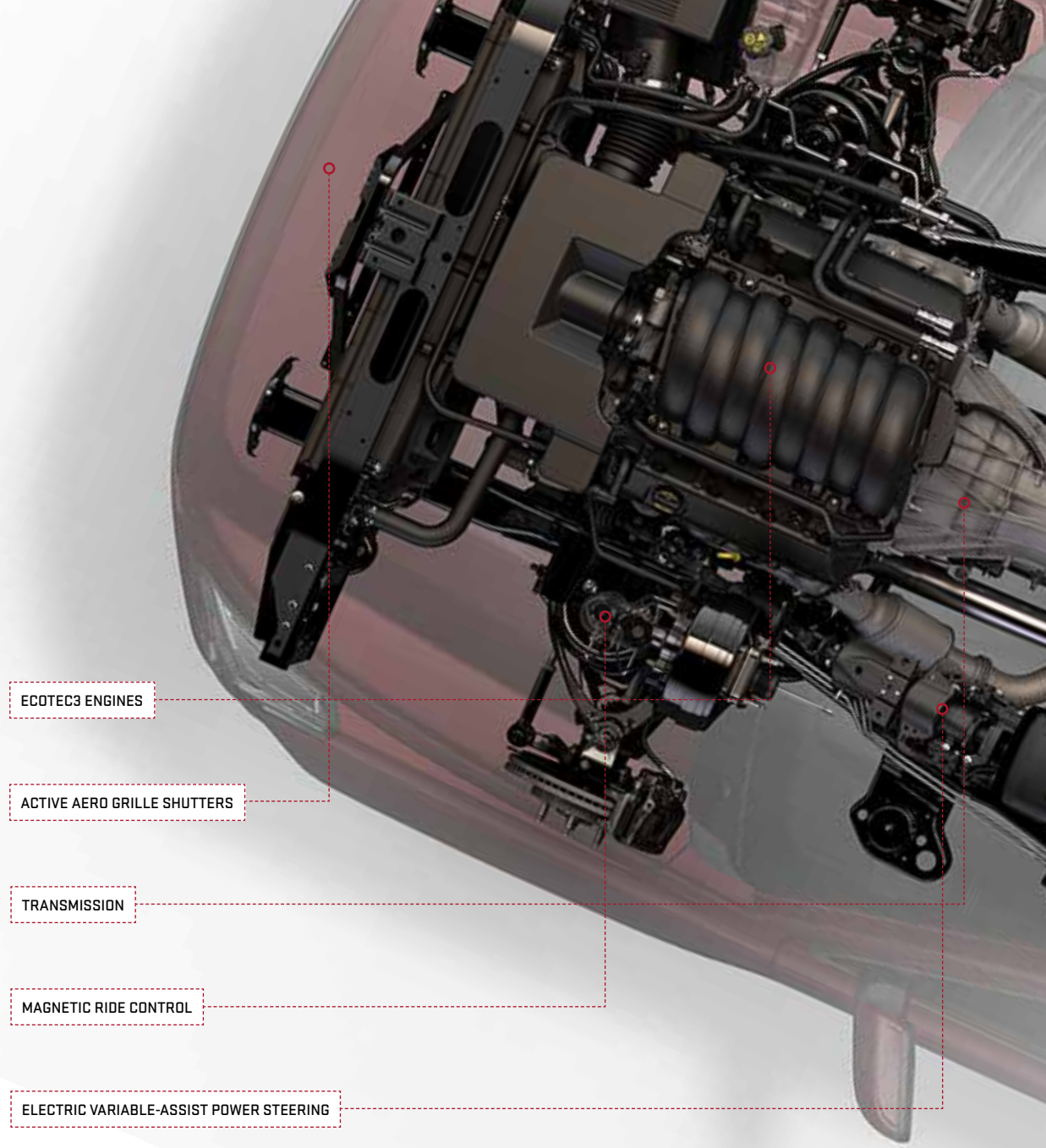

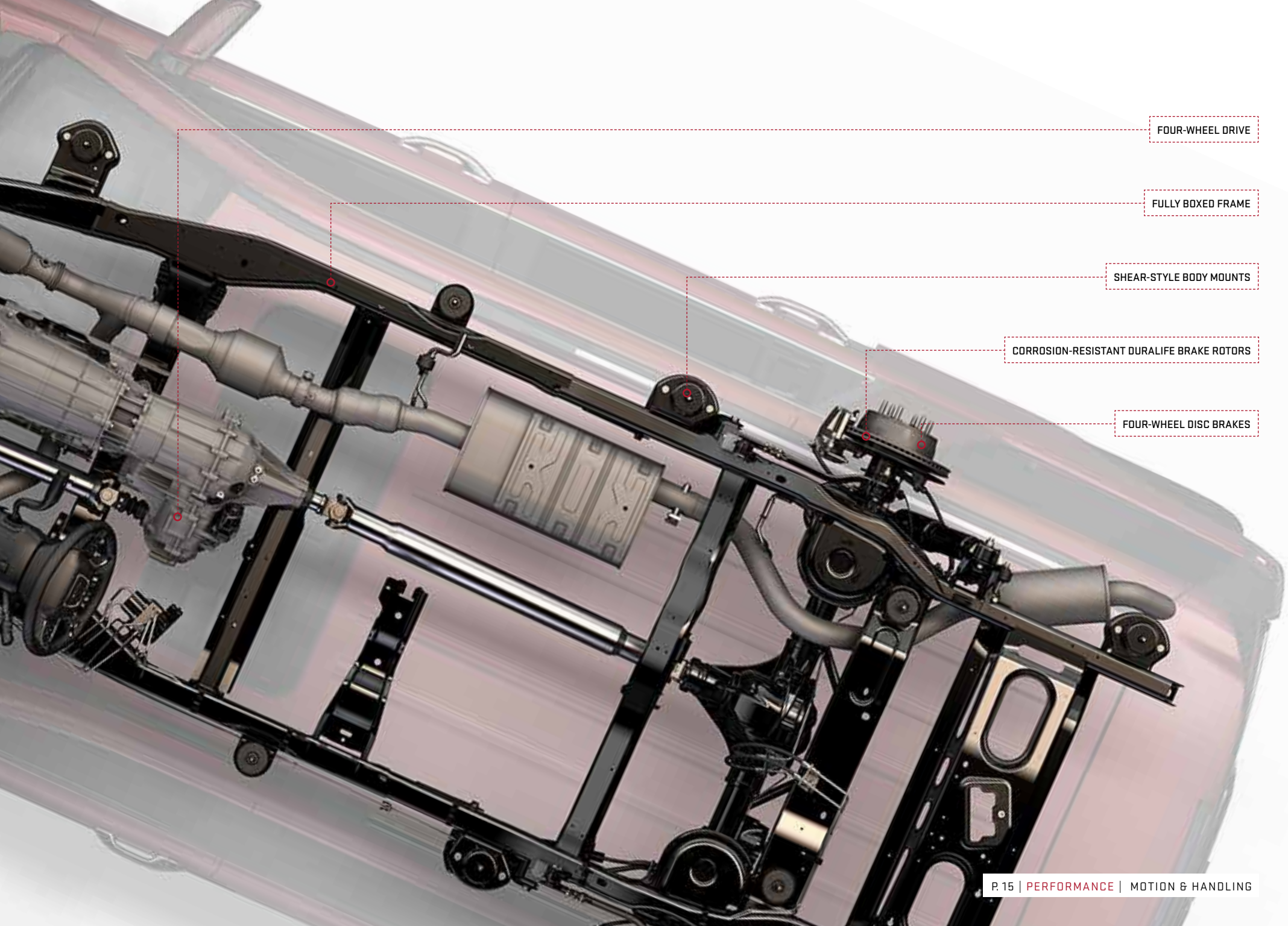
FOUR-WHEEL DRIVE
FULLY BOXED FRAME
SHEAR-STYLE BODY MOUNTS
CORROSION-RESISTANT DURALIFE BRAKE ROTORS
FOUR-WHEEL DISC BRAKES

BECAUSE SOME HOBBIES REQUIRE BIGGER EQUIPMENT.

Everything about Yukon is designed and engineered for ease of travel, including pulling your recreational equipment. Yukon offers a maximum trailer weight rating of up to 3856 kg,[1] when properly equipped.

YUKON SLT IN QUICKSILVER METALLIC
shown with available equipment.

AUTOMATIC LOCKING DIFFERENTIAL This feature directs power to the rear wheel with the most traction on loose gravel or slippery surfaces.

AUTO GRADE BRAKING It automatically senses when you want to slow your Yukon and engages a Grade Braking shift pattern within the transmission to help maintain your desired speed.

PREMIUM SMOOTH-RIDE SUSPENSION WITH AIR LEVELLER The available system constantly senses and adjusts Yukon's rear suspension height to maintain a level position. It also contributes to Yukon's max trailering rating.

HILL START ASSIST Sensors automatically detect when Yukon is on a 5 percent grade or more. It holds the brakes momentarily, providing time to switch from the brake to the accelerator and preventing rollback.

TOW/HAUL MODE Providing more power to accelerate when trailering or hauling heavy loads, Tow/Haul mode raises transmission upshift points. It also helps reduce speed by using engine compression to slow Yukon instead of merely braking.

TRAILER SWAY CONTROL Keep both you and your trailer heading in the same direction, automatically. The system uses StabiliTrak sensors to detect a swaying trailer, applying both Yukon's and the trailer's brakes (if properly equipped) to help bring it back in line.

TRAILER BRAKE CONTROLLER For fingertip control and easy monitoring of your trailer brakes, there's an available integrated trailer brake controller. Conveniently located to the left of the steering wheel, it displays the level of brake force or "gain" in the Driver Information Centre.

[1]Before you buy a vehicle or use it for trailering, carefully review the trailering section of the Owner's Manual. The weight of passengers, cargo and options or accessories may reduce the amount you can tow.

PROTECTION

SURROUNDED BY CONFIDENCE.

Yukon offers a comprehensive array of available driver-alert technologies, engineered with the idea that the best way to handle a collision is to avoid it. Safety features are no substitute for the driver's responsibility to operate the vehicle in a safe manner. The driver should remain attentive to traffic, surroundings and road conditions at all times. Read the vehicle Owner's Manual for important feature limitations and information.

LANE KEEP ASSIST WITH LANE DEPARTURE WARNING This available system provides gentle steering wheel turns (and Lane Departure Warning alerts if necessary) to help alert you to unintentionally drifting out of your lane when you are not actively steering and your turn signal is not activated.

FORWARD COLLISION ALERT The available feature warns you when you're rapidly approaching another vehicle and it detects a collision is imminent. It also provides an alert if you're following a detected vehicle too closely.

LOW SPEED FORWARD AUTOMATIC BRAKING If the vehicle is travelling at a low speed and the available system detects that a front-end collision situation is imminent while following a detected vehicle, and you haven't applied the brakes, the system automatically applies the brakes to help reduce the collision's severity. The system may even help to avoid the collision at very low speeds.

ADAPTIVE CRUISE CONTROL[1] This available feature enhances regular Cruise Control to allow the vehicle to automatically follow a detected vehicle ahead at the driver-selected following gap while you steer, reducing the need to frequently brake and accelerate.

LANE CHANGE ALERT WITH SIDE BLIND ZONE ALERT[2] This available system provides exterior rear-view mirror alerts to help you avoid contact with a moving vehicle detected in your side blind spot (or zone) or a vehicle that is rapidly approaching your side blind spot during a lane-change manoeuvre.

[1]Adaptive Cruise Control is no substitute for the driver's personal responsibility to operate the vehicle in a safe manner. The driver needs to remain attentive to traffic and road conditions and provide the steering, braking or other inputs necessary to retain control of the vehicle. The Front Automatic Braking feature may help reduce crash damage under certain conditions discussed in the Owner's Manual. Never rely on this feature to brake the vehicle. [2]Before making a lane change, always check the Side Blind Zone Alert display, check the exterior and interior rear-view mirrors, look over your shoulder for vehicles and hazards and start the turn signal.

REAR CROSS TRAFFIC ALERT When in Reverse, the available system provides alerts to help warn you of approaching cross traffic detected from the left or the right (e.g., out of a crowded parking space or driveway with side obstructions).

ENHANCED SECURITY PACKAGE To help ensure that it remains in your possession, Yukon surrounds itself with this available package that includes glass breakage sensors, vertical movement sensors, interior motion detectors, door and liftgate lock shields and numerous other theft-deterrent technologies to keep potential thieves at bay.

SAFETY ALERT DRIVER SEAT The available GM-patented Safety Alert Driver Seat provides you with the option of getting haptic seat-bottom vibration pulses instead of audible alerts.

PROFESSIONAL GRADE PROTECTION.

Pro Grade Protection is standard on every 2017 Yukon. From maintenance to protecting your entire vehicle, you can drive with confidence.

2-YEAR/48,000 KM LUBE-OIL-FILTER MAINTENANCE[1]

3-YEAR/60,000 KM NEW-VEHICLE LIMITED WARRANTY[2]

5-YEAR/160,000 KM POWERTRAIN LIMITED WARRANTY[2]

5-YEAR/160,000 KM ROADSIDE ASSISTANCE/COURTESY TRANSPORTATION[2]

[1]Whichever comes first. Limit of four complimentary Lube-Oil-Filter services in total. Fluid top-offs, inspections, tire rotations, wheel alignments and balancing, etc., are not covered. Conditions and limitations apply. See your dealer for details. [2]Whichever comes first. Conditions and limitations apply. See your dealer for details.

WE'RE AS CLOSE AS THE BLUE BUTTON.

Connected by On 4G LTE

Standard for 6 months, the OnStar Guidance Plan (trial excludes Hands-Free Calling minutes) lets you connect to an OnStar Advisor just by pushing the blue OnStar button in your Yukon.

ONSTAR 4G LTE WITH WI-FI HOTSPOT[1] Yukon has a built-in Wi-Fi hotspot for connecting up to seven tablets, laptops or other devices[2] at fast speeds, so the content you crave is always headed where you are. Requires a data plan after the 3-month or 3 GB data trial (whichever comes first).

ONSTAR BASIC PLAN[3] With the Basic Plan, you've got a powerful connection to your vehicle and the world around you standard for 5 years at no additional cost to you. You'll have access to select services, which include limited features of the myGMC mobile app[4] that lets you remote-start your vehicle (if equipped) and manage your vehicle's Wi-Fi hotspot[1] (if equipped). Plus, lock or unlock your doors—all from your mobile device. Your vehicle can run diagnostic checks on itself and remind you of servicing needs by email.

AUTOMATIC CRASH RESPONSE Depending on the severity of the crash, built-in sensors may automatically alert an OnStar Advisor who is immediately connected into your vehicle to see if you need help—even if you can't ask for it.

EMERGENCY SERVICES One push of the red emergency button gives you a priority connection to a specially trained OnStar Advisor who can direct emergency services to your exact location and offer critical assistance until help arrives. With OnStar, you're never alone.

CRISIS ASSIST During severe weather or other crisis situations, OnStar can provide a quick, central point of contact when you need emergency assistance, navigation help or information.

ROADSIDE ASSISTANCE[5] If you're stranded, have a flat tire or need a tow truck, just ask an OnStar Advisor to get help to your exact location to get you back on the road quickly.

STOLEN VEHICLE ASSISTANCE[6] If your vehicle is stolen, OnStar can work with authorities and can use GPS to pinpoint and quickly help recover it. On many models, an Advisor can send a signal to slow the vehicle or prevent it from being started. And with the new Theft Alarm Notification[7] feature, if your vehicle alarm sounds, you'll receive a notification by text, email or phone call.

TURN-BY-TURN NAVIGATION[8] Getting directions is as easy as pushing a button and telling an Advisor where you want to go. Directions are quickly downloaded to your vehicle, and a voice calls out every turn. An Advisor can also help you with a database of more than 1 million points of interest. To plan routes in advance, you can send destinations to your vehicle through an Advisor or the myGMC mobile app.[4]

myGMC MOBILE APP[4] You can remotely start your vehicle, lock or unlock your doors, honk your horn and flash your lights. You can also send destinations to your vehicle through your smartphone.

REMOTE SERVICES[9] A simple call to an OnStar Advisor can send a signal to unlock your doors or honk the horn and flash the lights. It's technology hard at work to get you back on the road.

HANDS-FREE CALLING[10] Your vehicle has built-in Hands-Free Calling to help keep you safely connected when your cellphone isn't easily accessible. Choose from minute bundles or a minutes-per-month plan.

ATYOURSERVICE Life just got easier and more affordable with the personalized connection of AtYourService. By simply pressing the blue OnStar button, our trusted Advisors can help you locate hotels and even book your room through Priceline.[11]

ADVANCED DIAGNOSTICS[12] Feel confident and safe knowing you have a self-diagnosing vehicle. Now your vehicle can easily run a check on its key systems and send you a monthly Diagnostics Report email. You'll know more and worry less with Advanced Diagnostics.

DEALER MAINTENANCE NOTIFICATION Is it time for a tire rotation? An oil change? Or a new air filter? You'll always know because your vehicle can email your Diagnostics Report to the dealer when it's time, and the dealer will contact you to set up a service appointment.

[1]Visit onstar.ca for coverage maps, details and system limitations. Available 4G LTE Wi-Fi requires compatible mobile device, active OnStar service and data plan. Data plans provided by AT&T. Services vary by model, conditions and geographical and technical restrictions. OnStar with 4G LTE connectivity is available on select vehicle models and in select markets. [2]Devices must be WPA2-compliant with an active OnStar service plan and data plan. Wi-Fi devices manufactured prior to 2006 may not be compatible. Please consult your device manufacturer for information regarding the WPA2 security protocol and Wi-Fi device compatibility. Vehicle must be started or in accessory mode to access Wi-Fi. Visit onstar.ca for system details and limitations. [3]The OnStar Basic Plan is available for 5 years from the date of delivery of the eligible new 2015 model year and newer vehicles and is transferable to subsequent owners for the remaining term. The Basic Plan includes access to: (1) monthly Diagnostics Report emails (capabilities vary by model); (2) Dealer Maintenance Notification; and (3) limited myGMC mobile app services, which include remote start (requires factory-installed and enabled remote-start system), remote lock/unlock doors (requires automatic locks) and remote horn and lights activation. The myGMC mobile app is available on select Apple,® Android,™ BlackBerry® and Windows® devices. Visit onstar.ca for vehicle availability, coverage map, details and system limitations. The OnStar Basic Plan does not include any Emergency Services, Automatic Crash Response, Stolen Vehicle Assistance, live Advisor service or Hands-Free Calling. These and other services are available under a paid plan. If you sell your vehicle or wish to cancel use of Basic Plan services, you must contact OnStar at 1-888-4-ONSTAR (1-888-466-7827). [4]Available on select Apple,® Android, BlackBerry and Windows devices. Requires an active OnStar service plan. Services vary by device, vehicle, conditions and the type of service plan you have. Data rates may apply. Please visit onstar.ca for vehicle availability, system limitations, geographical and technical restrictions and further details. [5]Roadside service provided by Allstate Roadside Services. Restrictions apply. [6]Services vary by model, conditions and geographical and technical restrictions. Visit onstar.ca for details and system limitations. Stolen Vehicle Slowdown and Remote Ignition Block are only available on select 2009 and newer GM vehicles. [7]Requires an active factory-installed theft-deterrent system, the Security or Guidance Plan and selected notification preference(s). Capability varies by model. Message and data rates may apply. Your vehicle's electrical systems and your smartphone (or other device) must be operative and sending/receiving data via wireless services and GPS satellite signals for the Theft Alarm Notification service to function properly. Vehicles must be locked electronically to arm the factory-installed theft-deterrent system. Theft Alarm Notifications are sent only to you. OnStar does not notify police of a Theft Alarm Notification. The Theft Alarm Notification service may alert you to a theft in progress. Always use caution and good judgement. Do not approach the vehicle unless you are certain the situation is safe. OnStar is not responsible for the acts of third parties. See OnStar User Terms and onstar.ca for system limitations. [8]Requires ABS and Guidance Plan. Visit onstar.ca for coverage map. Services vary by model. [9]Visit onstar.ca for coverage map, details and system limitations. Services vary by model and conditions. Unlock feature requires automatic door locks. Remote Start requires factory-installed and enabled remote-start system. [10]OnStar Hands-Free Calling requires an existing OnStar service plan and available prepaid minutes. Not available in certain markets. Calls may be made to the U.S. and Canada only. Minutes good for the specified term or until service plan expires, whichever comes first. Visit onstar.ca for coverage map, details and system limitations (including geographic and technical restrictions). [11]PRICELINE is a service mark of priceline.com LLC. [12]Availability and capabilities vary by model. Visit onstar.ca for details and system limitations. Message and data rates may apply. Requires an active OnStar service plan, email address on file and enrolment in Advanced Diagnostics. Diagnostic Alerts are designed to help provide the status of key systems based on information collected from the vehicle. Proactive Alerts are designed to help predict specific types of issues based on information collected from the vehicle. Other factors may affect vehicle performance. Not all issues will deliver alerts. In certain scenarios, a dealer service check may be required to confirm the accuracy of the Diagnostic and Proactive Alerts.

SELECTION

INSTRUMENT PANEL ACCENTS

Axiom Aluminum

Burnish Aluminum

DOOR AND CONSOLE ACCENTS

Periwood Wood Tone

Grand Lace Wood Tone

Java Burl Poplar Wood

MODELS

SLE	●	–	●[1]	●[2]	–
SLT	●	–	●[1]	●[2]	–
DENALI	–	●	–	–	●

KEY ● STANDARD ○ AVAILABLE – NOT AVAILABLE [1]Included with Cocoa/Dune interior trim. [2]Included with Jet Black interior trim.

EXTERIOR COLOURS See your GMC dealer for more exterior colour details and availability.

Mineral Metallic[3,4]

Dark Sapphire Blue Metallic[3]

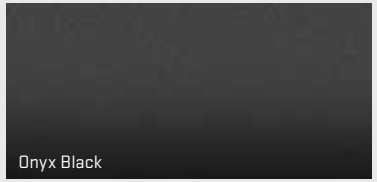
Onyx Black

Quicksilver Metallic

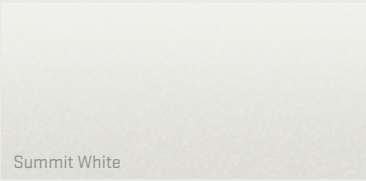
Summit White

Iridium Metallic

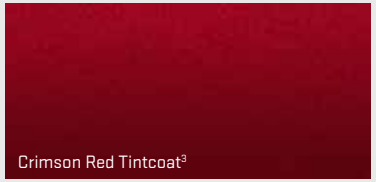
Crimson Red Tintcoat[3]

Sparkling Silver Metallic

White Frost Tricoat[3,5]

[3]Additional charge, premium paint. [4]Denali models only. [5]Not available on SLE trim.

INTERIOR COLOURS/ SEATING SURFACES

CLOTH

Cocoa/Dune

Jet Black/Jet Black

LEATHER APPOINTMENTS

Cocoa/Dune Perforated

Jet Black/Jet Black Perforated

Cocoa/Shale Perforated With Unique Denali Accents

Jet Black/Jet Black Perforated With Unique Denali Accents

Cocoa/Dark Atmosphere Perforated With Unique Denali Accents

●	●	–	–	–	–	–
–	–	●	●	–	–	–
–	–	–	–	●	●	●

WHEELS

UHN 18" Bright Machined Aluminum Standard on SLE and SLT

RD5 20" Polished Aluminum Available on SLE and SLT

NZG 20" Ultra-Bright Machined Aluminum Standard on Denali

RTL 20" Chrome Aluminum Available on Denali

SII 22" Ultra-Bright Aluminum with Midnight Silver Premium Paint Available on Denali

RPT 22" 6-Spoke Chrome Available on SLE, SLT and Denali

SMI 22" 6-Spoke Chrome Available on SLE, SLT and Denali

SEU 22" 6-Spoke Split Chrome Standard on SLT Premium Edition

ACCESSORIES

GMC Accessories are designed so you can personalize your Yukon to fit your style as well as your needs. They're also engineered and tested to meet Professional Grade standards.

- ROOF RACK CROSS RAIL PACKAGE • CHROME GRILLE
- CHROME MIRROR COVERS • 22" WHEELS
- CHROME DOOR HANDLES • CHROME ASSIST STEPS
- DUAL-SCREEN REAR-SEAT ENTERTAINMENT SYSTEM

TRIM LEVELS	SLE	SLT	DENALI
MECHANICAL			
ACTIVE AERO SHUTTERS	●	●	●
ALTERNATOR 150-amp	●	●	–
ALTERNATOR 170-amp	–	–	●
BATTERY Heavy-duty maintenance-free with rundown protection	●	●	●
BRAKES 4-wheel Anti-lock Brake System (ABS), 4-wheel disc with Duralife rotors	●	●	●
DRIVETRAIN 4x2	●	●	–
4x4. Single-speed active transfer case.	○	○	–
4x4. Active 2-speed transfer case with rotary controls. Included and only available with Heavy-Duty Trailering Package on SLE and SLT.	○	○	●
ENGINES 5.3L V8 EcoTec3 with aluminum block. Includes Active Fuel Management, Direct Injection and continuously Variable Valve Timing.	●	●	–
6.2L V8 EcoTec3 with aluminum block. Includes Active Fuel Management, Direct Injection and continuously Variable Valve Timing.	–	–	●
ENGINE BLOCK HEATER	○	○	○
EXTERNAL ENGINE OIL COOLER Heavy-duty air-to-oil, integral to radiator	●	●	●
HEAVY-DUTY AUTOMATIC LOCKING REAR DIFFERENTIAL	●	●	●
STABILITRAK Stability control system and traction control. Includes trailer sway control and Hill Start Assist.	●	●	●
STEERING Electric, power	●	●	●
SUSPENSION Front independent coil-over-shock with stabilizer bar	●	●	●
Rear multilink with coil springs	●	●	●
Premium Smooth Ride Suspension	●	●	–
Automatic Rear Level Control, air. Included and only available with Heavy-Duty Trailering Package on SLE and SLT.	○	○	–
Magnetic Ride Control. Includes automatic air-level control.	–	–	●
TRAILER BRAKE CONTROLLER Integrated. Included and only available with Heavy-Duty Trailering Package on SLE and SLT.	○	○	●
Trailering Equipment. Includes hitch platform with 51 mm trailering receiver and 7-wire harness with independent fused trailering circuits mated to a 7-way sealed connector.	●	●	●
TRANSMISSION 6-speed automatic, electronically controlled with overdrive, Tow/Haul mode, Electronic Engine Grade Braking and tap-up/tap-down shifting	●	●	–
8-speed automatic, electronically controlled with overdrive, Tow/Haul mode, Electronic Engine Grade Braking and tap-up/tap-down shifting	–	–	●
SEATING			
SEATS Front buckets with Premium Cloth. Includes 10-way power driver seat, 6-way power cushion, 2-way power lumbar control and power recline. Front-passenger seat is 6-way power.	●	–	–
Front 40/20/40 split bench with Premium Cloth. Includes 10-way power driver-seat adjuster, 6-way power passenger-seat adjuster, centre fold-down armrest with storage, lockable storage compartments in seat cushion (includes auxiliary power outlet), adjustable outboard head restraints and storage pockets.	○	–	–
Front heated and vented perforated leather-appointed seating. Includes full-feature reclining buckets with 12-way power driver and front-passenger seat adjuster, including 6-way power cushion, 2-way power recline and 4-way power lumbar for driver and front passenger. Includes driver memory feature (no memory on lumbar).	–	●	●
Heated second-row seats. Outboard positions.	–	●	●
Second-row 60/40 split-folding bench with manual operation	●	–	–
Second-row 60/40 split-folding bench with power release	–	●	○
Second-row buckets with power release	–	○	●
Third-row 60/40 manual split-folding bench	●	–	–
Third-row 60/40 split bench with power-folding seatback	–	●	●

TRIM LEVELS	SLE	SLT	DENALI
INSTRUMENTATION AND CONTROLS			
ADAPTIVE CRUISE CONTROL[1] With Front Automatic Braking to maintain a preset following distance	–	○	○
HEAD-UP DISPLAY Includes digital multifunction readouts	–	–	●
INSTRUMENTATION Includes speedometer, odometer/trip odometer, fuel level, voltmeter, engine temperature, oil pressure and tachometer. Driver Information Centre includes multicolour display on SLE and SLT.	●	●	●
203 mm diagonal Customizable Driver Display	–	–	●
POWER-ADJUSTABLE PEDALS Included and only available with Convenience Package on SLE	○	●	●
PUSH-BUTTON KEYLESS START	–	●	●
REAR VISION CAMERA	●	●	●
STEERING WHEEL Leather-wrapped, with controls for audio, Driver Information Centre, cruise control and Bluetooth®-enabled[2] phone	●	●	●
Heated steering wheel	–	●	●
Tilt-adjustable steering column with brake/transmission shift interlock	●	–	–
Power tilt and telescopic steering column	–	●	●
TEEN DRIVER FEATURE	●	●	●
TOW/HAUL MODE SELECTOR	●	●	●
FRONT AND REAR PARK ASSIST	●	●	●
INTERIOR DETAILS AND CONVENIENCE FEATURES			
ACTIVE NOISE CANCELLATION	–	–	●
CARPET Colour-keyed with removable carpeted floor mats for first and second rows	●	●	●
CLIMATE CONTROL Tri-zone automatic air conditioning. Includes individual climate settings for driver, front passenger and rear passengers.	●	●	●
Defogger, rear-window electric	●	●	●
CONSOLE Floor with storage area and cupholders. Included and only available with front bucket seats.	●	●	●
CUPHOLDERS Front seating area, rear floor console, third-row outboard side trim	●	●	●
MIRROR Interior rear-view with manual day/night	●	–	–
Auto-dimming rear-view. Included and only available with Convenience Package on SLE.	○	●	●
OUTLETS 12-volt power, 5 (4 with bench seat)	●	●	●
3-prong household style 110-volt, 1.1-amp, 150-watt	●	●	●
PASSIVE ENTRY SYSTEM Includes Remote Keyless Entry	–	●	●
REMOTE KEYLESS ENTRY	●	●	●
POWER PROGRAMMABLE DOOR LOCKS Includes lockout protection	●	●	●
POWER WINDOWS With all express-down and front express-up	●	●	●
REMOTE VEHICLE STARTER SYSTEM With keyless entry	●	●	●
SUNROOF Power, tilt-sliding with express-open and -close and wind deflector. On SLT and Denali, included with Sun, Entertainment and Destination Package.	–	○	○
TIRE PRESSURE MONITORING SYSTEM Does not monitor spare tire	●	●	●
UNIVERSAL HOME REMOTE Includes programmable garage-door opener. Included and only available with Convenience Package on SLE.	○	●	●
WIRELESS CHARGING MAT[3] Centre console-mounted. Not compatible with all phones.	–	●	●

KEY ● STANDARD ○ AVAILABLE – NOT AVAILABLE

TRIM LEVELS	SLE	SLT	DENALI
ENTERTAINMENT/COMMUNICATION/NAVIGATION			
AUDIO SYSTEM 203 mm diagonal colour touch-screen with IntelliLink,[4] AM/FM/SiriusXM[5] 3-month trial with up to 5 USB[2] ports and auxiliary jack. Includes text message alerts, Siri® Eyes Free functionality through voice command, Bluetooth[2] streaming audio for music and most phones, hands-free smartphone integration, voice-activated technology for radio and phone and an articulating screen with hidden storage.	●	●	–
203 mm diagonal colour touch-screen Navigation[6] with IntelliLink,[4] AM/FM/SiriusXM[5] 3-month trial and NavTraffic[5] with up to 5 USB[2] ports and auxiliary jack. Includes text message alerts, Siri® Eyes Free functionality through voice command, Bluetooth[2] streaming audio for music and most phones, hands-free smartphone integration, voice-activated technology for radio and phone and an articulating screen with hidden storage. On SLT, included with Sun, Entertainment and Destination Package.	–	○	●
HD Radio	●	●	●
Single-slot CD/MP3 player	●	●	●
Bose® premium 9-speaker sound system with subwoofer in centre console	●	●	–
Bose Centerpoint® Surround Sound premium 10-speaker sound system	–	–	●
REAR-SEAT ENTERTAINMENT SYSTEM Includes Blu-ray™/DVD player, overhead 234 mm diagonal screen, Wi-Fi® wireless projection capability, remote control, 2 2-channel wireless digital headphones (4 headphones on XL), rear-seat audio controls, auxiliary HDMI/MHL audio/video input and 2 USB[2] ports. Included with Sun, Entertainment and Destination Package. Replaces single-slot CD/MP3 player.	–	○	○
234 mm diagonal screen, third row. Included and only available with Rear-Seat Entertainment System on XL models.	–	○	○
ONSTAR[7] 5-year Basic Plan[8] and 6 months of Guidance Plan	●	●	●
4G LTE with available Wi-Fi hotspot[7] capability (with 3-month/3 GB trial, whichever comes first)	●	●	●
SIRIUSXM SATELLITE RADIO[5] 3 trial months included	●	●	●
PACKAGES			
HEAVY-DUTY TRAILERING PACKAGE Includes 3.42 rear axle ratio, Trailer Brake Controller, increased-capacity suspension with rear air level control and 2-speed AutoTrac transfer case on 4x4 models	○	○	–
CONVENIENCE PACKAGE Includes interior auto-dimming rear-view mirror, power-adjustable pedals, power liftgate and Universal Home Remote	○	–	–
ENHANCED DRIVER ALERT PACKAGE Includes Forward Collision Alert, Lane Keep Assist, Safety Alert Driver Seat, IntelliBeam automatic high beam on/off and Low Speed Forward Automatic Braking	○	●	●
ENHANCED SECURITY PACKAGE Includes body security content, self-powered horn, interior movement and vehicle inclination sensors, door and liftgate lock shields and glass breakage sensors in rear quarter glass and liftgate window. Removes sunglass holder and conversation mirror from overhead console.	–	○	○
SUN, ENTERTAINMENT AND DESTINATION PACKAGE Includes additional 9 months of SiriusXM Radio[5] and NavTraffic[5] service, power sunroof, Rear-Seat Entertainment System and audio system with Navigation[6] on SLT trim	–	○	○
MEMORY PACKAGE Includes memory for driver seat, steering column, exterior rear-view mirrors and pedals	–	●	●
SLT PREMIUM EDITION Includes 22" 6-spoke split chrome wheels, P285/45R22 all-season tires,[9] bright bodyside mouldings, grille insert and polished exhaust tip	–	○	–
EXTERIOR STYLING AND FUNCTIONALITY			
ASSIST STEPS Black with chrome inserts	●	●	●
Power-retractable with bright accent strip and LED perimeter lighting	–	–	○
GLASS Solar-Ray deep-tinted. All windows except light-tinted glass on windshield and driver- and front-passenger-side glass.	●	●	●
LIGHTS Halogen projector-beam headlamps with automatic exterior lamp control, LED signature lighting and flash-to-pass	●	●	–
HID projector-beam headlamps with automatic exterior lamp control, LED signature lighting and flash-to-pass	–	–	●
Halogen front fog lamps	●	●	●
IntelliBeam, automatic high-beam on/off. Included and only available with Enhanced Driver Alert Package on SLE.	○	●	●

TRIM LEVELS	SLE	SLT	DENALI
LUGGAGE RACK Roof-mounted side rails, black; black with bright accent on Yukon Denali	●	●	●
MOULDINGS Body-colour with bright inserts	–	–	●
EXTERIOR MIRRORS Heated, power-adjustable, manual-folding, body-colour. Includes driver-side spotter mirror.	●	–	–
Heated power-folding, power-adjustable, driver-side auto-dimming, body-colour mirrors with integrated turn-signal indicators, ground illumination and curb-tilt	–	●	●
PROGRAMMABLE POWER LIFTGATE Included and only available with Convenience Package on SLE	○	●	●
Hands-free liftgate capability	–	●	●
WIPERS Front rain-sensing intermittent wet-arm with flat blade and pulse washers	●	●	●
Rear intermittent with washer	●	●	●
SAFETY AND SECURITY			
AIRBAGS[10] Dual-stage frontal with Passenger Sensing System	●	●	●
Front centre airbag. Not included with available front 40/20/40 split bench on SLE.	●	●	●
Front and rear head curtain side-impact airbags for all outboard seating positions with rollover sensor	●	●	●
Front-seat-mounted side-impact driver and front-passenger airbags for thorax and pelvis protection	●	●	●
FORWARD COLLISION ALERT AND LANE KEEP ASSIST Included and only available with Enhanced Driver Alert Package on SLE	○	●	●
LANE CHANGE ALERT	–	●	●
LOW SPEED FORWARD AUTOMATIC BRAKING Included and only available with Enhanced Driver Alert Package on SLE	○	●	●
REAR CROSS TRAFFIC ALERT	–	●	●
SAFETY ALERT DRIVER SEAT Included and only available with Enhanced Driver Alert Package on SLE	○	●	●
SIDE BLIND ZONE ALERT	–	●	●
VEHICLE THEFT-DETERRENT SYSTEM Electrical unauthorized entry	●	●	●

[1]Adaptive Cruise Control is no substitute for the driver's personal responsibility to operate the vehicle in a safe manner. The driver needs to remain attentive to traffic and road conditions and provide the steering, braking or other inputs necessary to retain control of the vehicle. The Front Automatic Braking feature may help reduce crash damage under certain conditions discussed in the Owner's Manual. Never rely on this feature to brake the vehicle. [2]Not compatible with all devices. [3]The vehicle must be on or Retained Accessory Power must be active. Remove all objects from the charging pad. Place the compatible mobile device face up on the charging symbol on the charging pad. Move the device slowly until the battery charging symbol displays on the touch-screen, indicating the device is charging. See your Infotainment System Owner's Manual. [4]Full functionality requires compatible Bluetooth and smartphone, and USB connectivity for some devices. Visit intellilink.gmc.gm.ca for more details. [5]Available in 10 Canadian provinces, three territories and the 48 contiguous United States. Subscription sold separately after trial period. If you decide to continue your service at the end of your trial subscription, the plan you choose will automatically renew and bill at then-current rates until you call 1-877-209-0079 to cancel. Other fees and taxes will apply. All fees and programming subject to change. See SiriusXM "Terms & Conditions" and complete details at siriusxm.ca. [6]At time of printing, detailed map coverage is available for most major urban areas of the United States and for certain metropolitan areas of Canada (Vancouver, Calgary, Edmonton, Winnipeg, Windsor, London, Toronto, Ottawa, Montreal, Quebec City and Halifax). Coverage is significantly limited outside these areas. [7]Visit onstar.ca for coverage maps, details and system limitations. Available 4G LTE Wi-Fi requires compatible mobile device, active OnStar service and data plan. Data plans provided by AT&T.® Services vary by model, conditions and geographical and technical restrictions. OnStar with 4G LTE connectivity is available on select vehicle models and in select markets. [8]The OnStar Basic Plan is available for 5 years from the date of delivery of the eligible new 2015 model year and newer vehicles and is transferable to subsequent owners for the remaining term. The Basic Plan includes access to: (1) monthly Diagnostics Report emails (capabilities vary by model); (2) Dealer Maintenance Notification; and (3) limited myGMC mobile app services, which include remote start (requires factory-installed and enabled remote-start system), remote lock/unlock doors (requires automatic locks) and remote horn and lights activation. The myGMC mobile app is available on select Apple,® Android,™ BlackBerry® and Windows® devices. Visit onstar.ca for vehicle availability, coverage map, details and system limitations. The OnStar Basic Plan does not include any Emergency Services, Automatic Crash Response, Stolen Vehicle Assistance, live Advisor service or Hands-Free Calling. These and other services are available under a paid plan. If you sell your vehicle or wish to cancel use of Basic Plan services, you must contact OnStar at 1-888-4-ONSTAR (1-888-466-7827). [9]All-season tires may not satisfy winter tire requirements in all regions of the country. Tires specifically designed for severe winter conditions and marked with the "winter tire" symbol may be required during certain months or in certain regions. Contact your Provincial, Municipal or local road authority for information regarding which tires are required in your particular area. [10]Always use safety belts and the correct restraint for your child's age and size. Even in vehicles equipped with the Passenger Sensing System, children are safer when properly secured in a rear seat in the appropriate infant, child or booster seat. Never place a rear-facing infant restraint in the front seat of any vehicle equipped with a passenger airbag. See the Owner's Manual and child safety seat instructions for more safety information.

KEY ● STANDARD ○ AVAILABLE – NOT AVAILABLE

YUKON/YUKON XL/YUKON DENALI/YUKON XL DENALI ENGINE SPECIFICATIONS

	L83	L86
ENGINE	EcoTec3 5.3L V8 DI, VVT, ACTIVE FUEL MANAGEMENT	EcoTec3 6.2L V8 DI, VVT, ACTIVE FUEL MANAGEMENT
HP @ RPM	355 @ 5600	420 @ 5600
LB.-FT. TORQUE @ RPM	383 @ 4100	460 @ 4100
ACTIVE FUEL MANAGEMENT	Included	Included
ESTIMATED FUEL-CONSUMPTION RATING[1] city/hwy, L/100 km (mpg)		
SWB		
4x2	15.1 (19)/10.4 (27)	–
4x4	15.2 (19)/10.8 (26)	16.0 (18)/11.7 (24)
LWB		
4x2	15.1 (19)/10.4 (27)	–
4x4	15.4 (18)/10.8 (26)	16.3 (17)/11.7 (24)
STANDARD	YUKON YUKON XL	YUKON DENALI YUKON XL DENALI

YUKON/YUKON XL/YUKON DENALI/YUKON XL DENALI TRANSMISSION SPECIFICATIONS

MODEL	DRIVETRAIN/TRANSMISSION
SLE/SLT	4x2 or 4x4/ Hydra-Matic 6-speed electronically controlled automatic with Driver Shift Control, Electronic Engine Grade Braking and Tow/Haul mode
Denali	4x4/ Hydra-Matic 8-speed electronically controlled automatic with Driver Shift Control, Electronic Engine Grade Braking and Tow/Haul mode

MEASUREMENTS/CAPACITIES

	4x2/4x4	4x2/4x4	4x4	4x4
	YUKON	YUKON XL	YUKON DENALI	YUKON XL DENALI
TURNING DIAMETER curb to curb (metres)	11.9	13.1	11.9	13.1
WHEELBASE (mm)	2946	3302	2946	3302
MAXIMUM CARGO VOLUME[2] (litres) Behind first/second/third row	2682/1464/433	3447/2172/1113	2682/1464/433	3447/2172/1113
OVERALL LENGTH (mm)	5179	5700	5179	5700
OVERALL WIDTH (mm)	2045	2045	2045	2045
HEIGHT (mm)	1890	1890	1890	1890
FUEL TANK CAPACITY approx. litres (imp. gal.)	98 (21.6)	117 (25.8)	98 (21.6)	117 (25.8)

MAXIMUM TRAILER WEIGHT RATINGS[3]

MODEL	YUKON		YUKON XL		YUKON DENALI/YUKON XL DENALI	
	EcoTec3 5.3L		EcoTec3 5.3L		EcoTec3 6.2L	
	AXLE RATIO	MAX. TRAILER WEIGHT (KG)	AXLE RATIO	MAX. TRAILER WEIGHT (KG)	AXLE RATIO	MAX. TRAILER WEIGHT (KG)
YUKON 4x2	3.08/3.42	2948/3856	3.08/3.42	2858/3765	–	–
YUKON 4x4	3.08/3.42	2858/3720	3.08/3.42	2722/3629	–	–
DENALI 4x4	–	–	–	–	3.23	3674/3538

[1]Fuel-consumption estimates based on GM preliminary testing in accordance with Government of Canada approved test methods. Refer to vehicles.nrcan.gc.ca for details. Your actual fuel consumption may vary. [2]Cargo and load capacity limited by weight and distribution.
[3]Before you buy a vehicle or use it for trailering, carefully review the trailering section of the Owner's Manual. The weight of passengers, cargo and options or accessories may reduce the amount you can tow.

IMPORTANT WORDS

PEACE OF MIND, STANDARD WITH EVERY GMC MODEL

When you build them with quality, you can back them with confidence. That's why General Motors of Canada backs every GMC model with the best coverage in Canada. Program highlights include:

- 2-year/48,000 km Lube-Oil-Filter Maintenance[1]
- 3-year/60,000 km New-Vehicle Limited Warranty[2]
- 5-year/160,000 km Powertrain Limited Warranty, with $0 deductible on repairs and the warranty is fully transferable at no charge[2]
- 5-year/160,000 km Courtesy Transportation[2]
- 5-year/160,000 km 24/7 Roadside Assistance[2]
- 6-year/160,000 km rust-through perforation coverage[2]
- 8-year/130,000 km coverage on catalytic converters and Powertrain Control Modules (PCMs)[2]

OTHER OWNERSHIP PRIVILEGES AND PROGRAMS:[3]

- **GM Protection Plan (GMPP)** – The only extended service plan backed by the resources and commitment of General Motors, GMPP may be purchased at the time of sale or subsequently during the New-Vehicle Limited Warranty period.
- **Certified Service** – With GM-certified technicians and GM-approved parts, nobody knows your GM vehicle better.
- **GMC Owner Centre** – As an owner, take advantage of the GMC Owner Centre. This online owner's destination gives you access to contests, current offers and helpful resources such as Owner's Manuals. Find out more at **gmcowner.ca**.

TO HELP YOU PURCHASE OR LEASE A NEW VEHICLE:

- **Purchase Financing and Leasing** – On-the-spot financing, see dealer for full details.[4]
- **GM Student Bonus Program** – Students or recent graduates of high school, college or university[3] may be eligible to receive a Student Bonus vehicle redemption allowance of $500 or $750[5] (tax inclusive) (purchased vehicle dependant) to use toward the purchase, lease or finance of one eligible new GMC vehicle.
- **GM Card** – Cardholders may redeem Earnings toward the total purchase price or lease down payment of an eligible new GMC truck, SUV or crossover. Restrictions and limitations apply.[5] For full program details, visit **gmcard.ca**.

INFORMATION RESOURCES:

You can find more information about these programs from your GMC dealer, or at these information centres:

- The GM website at **gm.ca**
- The GM Customer Care Centre at **1-800-GM-DRIVE** (**1-800-463-7483** or **1-800-263-3830** for TDD users)

A WORD ABOUT THIS BROCHURE

Some of the equipment shown or described throughout this brochure may be available at extra cost. We have tried to make this brochure comprehensive and factual. We reserve the right, however, to make changes at any time, without notice, in prices, colours, materials, equipment, specifications, models and availability. Specifications, dimensions, measurements, ratings and other numbers in this brochure and other printed materials provided at the dealership or affixed to vehicles are approximates based upon design and engineering drawings and prototypes and laboratory tests. Your vehicle may differ due to variations in manufacture and equipment. Since some information may have been adapted since the time of printing, please check with your GMC dealer for complete details. General Motors of Canada Company reserves the right to lengthen or shorten the model year for any product, for any reason, or to start and end model years at different times.

A WORD ABOUT ASSEMBLY

GMC vehicles are equipped with engines and components produced and assembled by different operating units of General Motors, its subsidiaries and suppliers to GM worldwide. We sometimes find it necessary to produce GMC vehicles with different or differently sourced components than originally scheduled. Since some options may be unavailable when your vehicle is assembled, we suggest that you verify that your vehicle includes the equipment you ordered or, if there are changes, that they are acceptable to you.

TRADEMARKS

©2016 General Motors of Canada Company. All rights reserved. The marks appearing in this brochure, including but not limited to: General Motors, GM, GMC, Yukon, Denali and their respective logos, emblems, slogans and vehicle model names and body designs; and other marks such as Solar-Ray and StabiliTrak are trademarks of General Motors and/or General Motors of Canada Company, its subsidiaries, affiliates or licensors. OnStar and the OnStar emblem are registered trademarks of OnStar, LLC. The SiriusXM name and related logos are trademarks of SiriusXM Canada, Canadian Satellite Radio, Inc. Bluetooth is a registered trademark of Bluetooth SIG, Inc. Bose is a registered trademark of the Bose Corporation. Apple is a registered trademark of Apple, Inc. Android is a trademark of Google, Inc. BlackBerry is a registered trademark of BlackBerry Limited. Windows is a registered trademark of Microsoft Corporation.

[1]Whichever comes first. Limit of four complimentary Lube-Oil-Filter services in total. Fluid top-offs, inspections, tire rotations, wheel alignments and balancing, etc., are not covered. Conditions and limitations apply. See your dealer for details. [2]Whichever comes first. Conditions and limitations apply; see dealer for details. [3]Conditions and limitations apply. [4]Subject to eligibility. [5]Program subject to change.

GMC

WE ARE PROFESSIONAL GRADE

191-17-B-010E